J.B.
Pl. estimate
15.1.18

ଓଡିଶା ସରକାର
ପଞ୍ଚାୟତିରାଜ ଓ ପାନୀୟ ଜଳ ବିଭାଗ
Government of Odisha
PANCHAYATI RAJ AND DRINKING WATER DEPARTMERNT

By Fax/E-mail

ଓଡିଶା ସଚିବାଳୟ
ସଚିବାଳୟ ମାର୍ଗ, ଭୁବନେଶ୍ୱର-୭୫୧୦୦୧
Odisha Secretariat, Sachibalaya Marg, Bhubaneswar-751 001
Fax-0674-2391413.
E-mail- prsec.or@nic.in

No. 17-NREG-11- 9060- 914 **PR/ Date:** 15/01/2018

From

Manas Ranjan Debata, OAS (SAG)
Additional Secretary to Government

To

All Collectors-cum-DPC

All PD, DRDAs

Sub: Plan and estimate of Cattle Shed, Goat Shelter, Piggery Shelter and poultry Shelter under MGNREGS.

Madam/Sir,

In enclosing the approved plan and estimate of Cattle Shed, Goat Shelter, Piggery Shelter and poultry Shelter, I am directed to request you to adhere to the following instructions scrupulously in execution of the projects under MGNREGS.

1. The projects should be taken up within the approved ceiling cost.
2. Projects shall be taken up as per the model plan and specification.
3. Projects to be completed by 20th March, 2018.

Sl. No.	Name of the projects	Estimated cost
1	Cattle Shed	Rs. 1,13,000/-
2	Goat Shelter	Rs. 44,000/-
3	Piggery Shelter	Rs. 69,000/-
4	Poultry Shelter	Rs. 39,000/-

Yours faithfully

Additional Secretary to Government
8/1/18

Copy communicated to:

1. All BDOs for information and necessary action.
2. Deputy Secretary, Rural Housing PR & DW Department for kind information.

Model Estimate for Cattle Shed

Sl. No.	Description	Nos.	Length in feet	Width in feet	Ht/thick in feet	Vol/ Area in cft/sft	Vol/ Area in cum	Unit Rate in Rs.	Amount Rs.
1	Earth work in excavation in hard soil in foundation								
	Long wall	2	26.42	2.00	2.50	264.20			
	Short wall	2	8.67	2.00	2.50	86.70			
	Urine Tank	1	3.00	3.00	3.00	27.00			
						377.90 Cft	**10.69 Cum**	91.72	980.00
2	Filling F & P with Sand well watered & rammed								
	Long wall	2	26.42	2.00	1.00	105.68			
	Short wall	2	8.67	2.00	1.00	34.68			
	Fodder tough	1	23.59	1.33	1.16	36.39			
	Room	1	23.59	10.67	0.50	125.85			
	Urine Tank	1	3.00	3.00	0.50	4.50			
						307.11 Cft	**8.69 Cum**	410.22	3565.00
3	Cement concrete (1:4:8) using 40 mm size hbhg metal including curing etc.								
	Long wall	2	26.42	2.00	0.33	34.87			
	Short wall	2	8.67	2.00	0.33	11.44			
	Fodder tough	1	23.59	1.33	0.33	10.35			
	Room	1	23.59	10.67	0.33	83.06			
						139.74 Cft	**3.95 Cum**	3176.10	12559.00
4	Fly ash brick 0'-10"in C:M(1:6) for foundation and plinth etc. complete.								
	1st footing								
	Long wall	2	25.67	1.25	0.58	37.22			
	Short wall	2	9.42	1.25	0.58	13.66			
	Plinth								
	Long wall	2	25.25	0.83	1.42	59.52			
	Short wall	2	9.84	0.83	1.42	23.19			
	Urine Tank	2	3.00	0.42	3.08	7.76			
		2	2.17	0.42	3.08	5.61			
						146.97 Cft	**4.16 Cum**	3411.40	14188.00
5	Fly ash brick 0'-10"in C:M (1:6) in superstructure etc. complete.								
	Long wall	2	25.25	0.83	7.50	314.36			
	Fodder wall	1	23.59	0.42	2.00	19.82			
	Parapet	1	25.25	0.83	0.58	12.16			
	Short wall	2	9.84	0.83	7.50	122.51			
	Fodder wall	2	1.33	0.42	1.00	1.12			
	Parapet	2	9.84	0.83	0.58	9.47			
	Deduction for opening	-2	7.75	0.83	7.00	-90.06			
						389.38 Cft	**11.02 Cum**	3444.39	37956.00

6	4" dry brick khoa well watered and rammed for flooring etc. complete.								
	Urine Tank	1	3.00	3.00		**9.00 Sft**	**0.84 Sqm**	175.60	146.00
7	25mm thick D.P.C. with C:C (1:2:4) using 12mm size C.B.H.G chips including hoisting and laying etc complete.								
	Long wall	2	25.25	0.83		41.92			
	Short wall	2	9.84	0.83		16.33			
						58.25 Sft	**5.41 Sqm**	186.10	1007.00
8	25mm thick grading with C:C (1:2:2) using 6mm size C.B.H.G bajuri including hoisting and laying etc complete.								
	Room	1	23.59	10.67		251.71			
	Fodder bottum	1	23.59	1.33		31.37			
						283.08 Sft	**26.30 Sqm**	200.90	5283.00
9	Fixing G.C.I. Sheet in roof drilling hole in wind ties including fixing of ridges valleys wind ties etc. excluding cost of fitting								
	G.C.I. Sheet Roofing	1	25.25	14.00		353.50			
						353.50 Sft	**32.84 Sqm**	345.40	11342.00
10	Supplying,fitting & fixing of Iron angle including cost of material & labour,etc.								
	50mmx50mmx6mm size angle in main trusses	2	11.50	23.00	7.01	4.50	**31.55**		
	40mmx40mmx6mm size angle in main rafter	3	25.25	75.75	23.09	3.50	**80.81**		
							112.36 Kg	75.00	8426.00
11	16mm thick cement plaster with C.M.(1:6) in walls								
	Inside plaster								
	Long wall	1	42.75		7.50	320.63			
	Short wall	2	9.84		7.50	147.60			
						468.23 Sft	**43.50 Sqm**	120.00	5219.00
12	12mm thick cement plaster with C.M.(1:6) in walls								
	Outside plaster								
	Long wall	1	17.16		8.42	144.49			
	Short wall	2	11.50		8.42	193.66			
	Parapet	1	44.93		2.00	89.86			
						428.01 Sft	**39.76 Sqm**	87.50	3479.00
13	12 mm thick cement plaster in (1:4) C.M. including cement punning,etc.								
	Fodder wall	1	23.59	5.83		137.53			
	Inside plaster	1	61.10	2.50		152.75			
	Urine Tank	1	9.68	3.08		29.81			
						320.09 Sft	**29.74 Sqm**	107.80	3205.00

92

14	Cement washing two coats with cost of all labour & materials .			
	Qnty. As per item No.11	43.50		
	Qnty. As per item No.12	39.76		
		83.26 Sqm	11.30	940.00
15	Painting two coats with any approved cement paint to the inside surface including cost of paint & curing.			
	Qnty. As per itemno 14	**83.26 Sqm**	22.90	1906.00
	Sub Total		**Rs**	**110201.00**
16	Provision for other unforseen item if any as per actual such as L.Hook,Nut bolt,Washer,100mm P.V.C.Pipe,cost of Display board,etc.			2799.00
	Total		**Rs**	**113000.00**

(Rupees one lakh thirteen thousand)only.

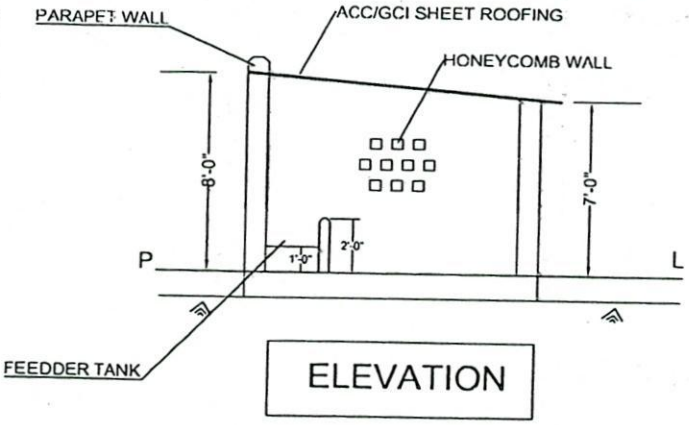

ELEVATION

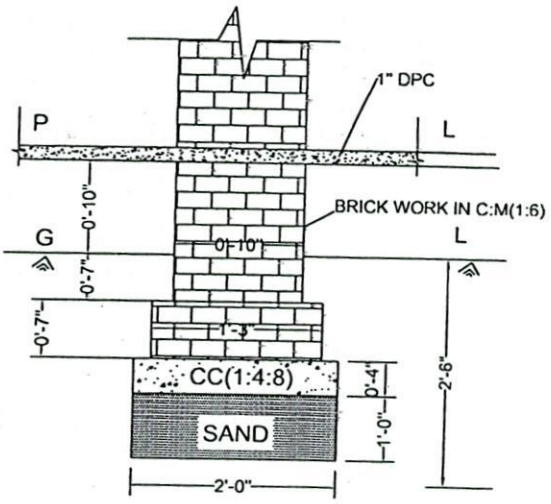

SECTION OF FOUNDATION

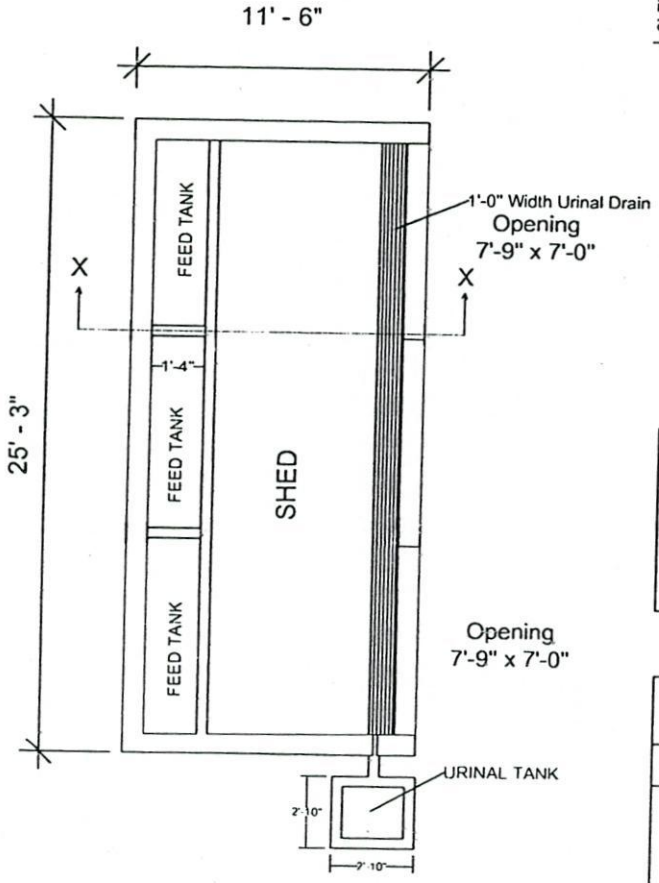

FLOOR PLAN

NOTE:-

1. Written dimensions in the drawing must be followed.
2. All measurements must be checked before execution.
3. Proper design should be made for foundation before the execution of work as per soil condition .
4. Door closing should be used with local available materials.
5. Provision for honeycomb for all wall except back wall.

TITLE - **MODEL PLAN OF CATTLE SHED**
PLINTH AREA - 290 Sft.

GOVT. OF ODISHA, PANCHAYATIRAJ & DW DEPARTMENT

31.08.17 JUNIOR ENGINEER (P R & DW DEPTT.)	31/08/17 ASSISTANT ENGINEER (P R & DW DEPTT.)	31/8/17 SUPERINTENDING ENGINEER (P R & DW DEPTT.)
DATE:- 30. 08 . 2017	SCALE :- N.T.S	DRG.NO PR & DW/02/ 2017

Model Estimate for Goat Shelter

113

S!. No.	Description	Nos.	Length in feet	Width in feet	Ht/thick in feet	Vol/ Area in cft/sft	Vol/ Area in cum	Unit Rate in Rs.	Amount in Rs.
1	Earth work in excavation in hard soil in foundation								
	Long wall	2	15.17	2.00	2.50	151.70			
	Short wall	2	5.33	2.00	2.50	53.30			
						205.00 Cft	**5.80 Cum**	91.72	532.00
2	Filling F & P with Sand well watered & rammed								
	Long wall	2	15.17	2.00	1.00	60.68			
	Short wall	2	5.33	2.00	1.00	21.32			
						82.00 Cft	**2.32 Cum**	410.22	951.00
3	Cement concrete (1:4:8) using 40 mm size hbhg metal including curing etc.								
	Long wall	2	15.17	2.00	0.25	15.17			
	Short wall	2	5.33	2.00	0.25	5.33			
						20.50 Cft	**0.58 Cum**	3176.10	1842.00
4	Fly ash brick 0'-10"in C:M(1:6) for foundation and plinth etc. complete.								
	1st footing								
	Long wall	2	14.42	1.25	0.58	20.91			
	Short wall	2	6.08	1.25	0.58	8.82			
	Plinth								
	Long wall	2	14.00	0.83	1.50	34.86			
	Short wall	2	6.50	0.83	1.50	16.19			
						80.77 Cft	**2.29 Cum**	3411.40	7797.00
5	Fly ash brick 0'-10"in C:M (1:6) in superstructure etc. complete.								
	Long wall	2	14.00	0.83	1.50	34.86			
	Long wall (Pillar)	4	1.25	0.83	6.00	24.90			
	Parapet	1	14.00	0.83	0.58	6.74			
	Short wall	2	6.50	0.83	7.50	80.93			
	Parapet	2	6.50	0.83	0.58	6.26			
						153.68 Cft	**4.35 Cum**	3444.39	14981.00
6	4" dry brick khoa well watered and rammed for flooring etc. complete.								
	Room	1	12.33	6.50		**80.15 Sft**	**7.45 Sqm**	175.60	1307.00
7	25mm thick D.P.C. with C:C (1:2:4) using 12mm size C.B.H.G chips including hoisting and laying etc complete.								
	Long wall	2	14.00	0.83		23.24			
	Short wall	2	6.50	0.83		10.79			
						34.03 Sft	**3.16 Sqm**	186.10	588.00

Sl. No.	Description	Nos.	Length in feet	Width in feet	Ht/thick in feet	Vol/ Area in cft/sft	Vol/ Area in cum /sqm	Unit Rate in Rs.	Amount in Rs.
8	2.5 cm thick A.S. flooring in C.C (1:2:4) with 12 mm size HG chips including punning incl. cost, conveyance & royality of materials.								
	Room	1	12.33	6.50		80.15			
						80.15 Sft	**7.45 Sqm**	200.90	1495.00
9	Fixing G.C.I. Sheet in roof drilling hole in wind ties including fixing of ridges valleys wind ties etc. excluding cost of fitting								
	G.C.I. Sheet Roofing	1	14.00	10.00		140.00			
						140.00 Sft	**13.01 Sqm**	345.40	4492.00
10	Supplying,fitting & fixing of Iron angle including cost of material & labour,etc.								
	50mmx50mmx6mm size angle in main trusses	1	8.16	8.16	2.49	4.50	**11.19**		
	40mmx40mmx6mm size angle in main rafter	2	14.00	28.00	8.53	3.50	**29.87**		
							41.06 Kg	75.00	3079.00
11	16mm thick cement plaster with C.M.(1:6) in walls								
	Inside plaster								
	Long wall	2	12.33		1.50	36.99			
	Long wall (Pillar)	4	2.08		5.50	45.76			
	Short wall	2	6.50		7.00	91.00			
						173.75 Sft	**16.14 Sqm**	120.00	1936.00
12	12mm thick cement plaster with C.M.(1:6) in walls								
	Outside plaster								
	Long wall outside	2	14.00		2.42	67.76			
	Long wall (Pillar)	4	2.08		6.00	49.92			
	Short wall	2	8.16		8.42	137.41			
	Parapet	1	18.40		2.00	36.80			
						291.89 Sft	**27.12 Sqm**	87.50	2372.00
13	12 mm thick cement plaster in (1:4) C.M. including cement punning to dados,etc.								
	Long wall	4	12.33		0.50	24.66			
	Short wall	2	6.50		0.50	6.50			
						31.16 Sft	**2.89 Sqm**	107.80	312.00
14	Cement washing two coats with cost of all labour & materials .								
	Qnty. As per item No.11						16.14		
	Qnty. As per item No.12						27.12		
							43.26 Sqm	11.30	488.00

Sl. No.	Description	Nos.	Length in feet	Width in feet	Ht/thick in feet	Vol/ Area in cft/sft	Vol/ Area in cum	Unit Rate in Rs.	Amount in Rs.
15	Painting two coats with any approved cement paint to the inside surface including cost of paint & curing.								
	Qnty. As per itemno 14						**43.26 Sqm**	22.90	990.00
	Sub Total							**Rs**	**43162.00**
16	Provision for other unforseen item if any as per actual such as L.Hook,Nut bolt,Washer,100mm P.V.C.Pipe,cost of Display board,etc.								402.00
	Total							**Rs**	**43564.00**
17	Work Contingency-1%								436.00
	Grand Total							**Rs**	**44000.00**

(Rupees forty four thousand)only.

Mandays generated:-Unskilled Labour 80

Total:-Unskilled Wages = 80 176.00 Rs. 14080.00

Wage : Material = 32 : 68

i)- This is a model estimate.The estimate may be varied according to site condition & as per the requirement.

ii)- Suitable locally available materials may be substituted if the materials adopted in the model estimate are not available.

iii)- Rates adopted are tentative,during execution actual cost may be calculated basing on S.O.R.

29.12.17
Junior Engineer
P.R. & D.W.Deptt.

29/12/17
Assistant Engineer
P.R. & D.W.Deptt.

29/12/17
Superintending Engineer
Panchayati Raj & Drinking Water Deptt.

110

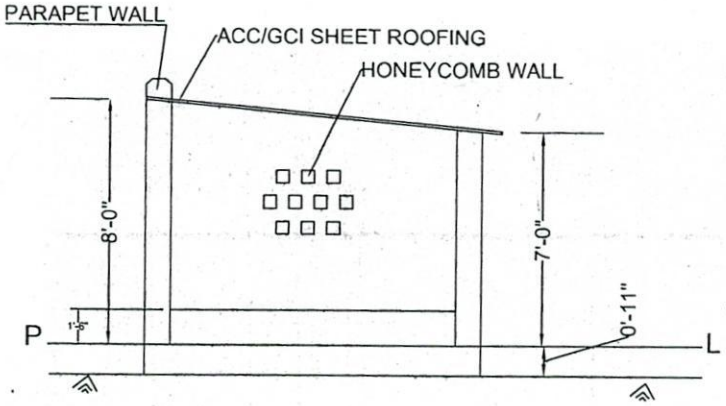

SECTION AT X-X

ELEVATION

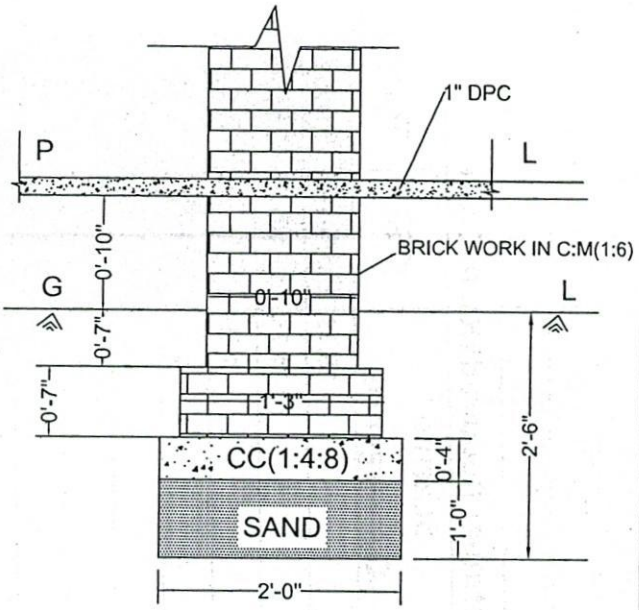

SECTION OF FOUNDATION

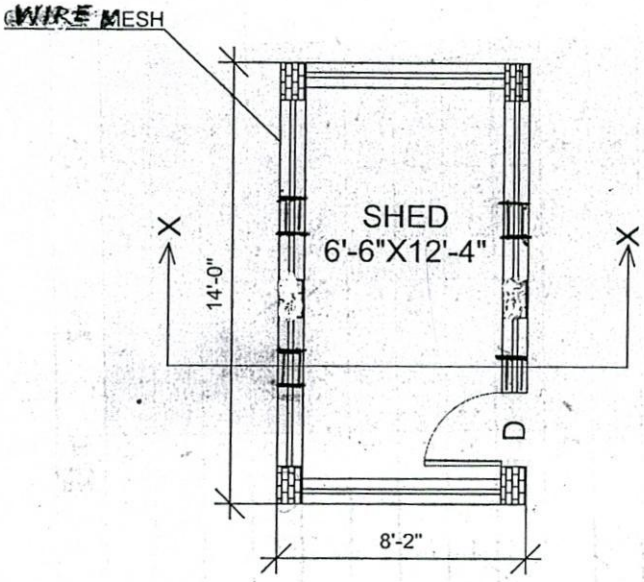

FLOOR PLAN

NOTE:-

1. Written dimensions in the drawing must be followed.
2. All measurements must be checked before execution.
3. Proper design should be made for foundation before the execution of work as per soil condition.
4. Door closing should be used with local available materials.
5. Provision for honeycomb for all wall except back wall.

TITLE - MODEL PLAN OF GOAT SHELTER PLINTH AREA - 114 Sft.		
GOVT. OF ODISHA, PANCHAYATIRAJ & DW DEPARTMENT		
29.12.17 JUNIOR ENGINEER (P R & DW DEPTT.)	29/12/17 ASSISTANT ENGINEER (P R & DW DEPTT.)	29/12/17 SUPERINTENDING ENGINEER (P R & DW DEPTT.)
DATE:- 30. 08 . 2017	SCALE :- N.T.S	DRG.NO PR & DW/04/ 2017

Name of Cluster: Talabasta

District & State: Cuttack, Odisha

S.No	Component	No. of Projects			vestment Required (Rs. In Crore		
		Scheme Convergence	CGF	Total	Scheme Convergence	CGF	Total
1	Internal Roads	51	66	117	18.23	6.44	24.67
2	Pipe Water Supply	9	7	16	14.74	1.06	15.80
3	Agro Services	64	13	77	4.39	3.02	7.41
4	Education	42	44	86	4.29	4.13	8.42
5	Sanitation	6	7	13	8.21	0.15	8.36
6	Social Infrastructure	34	3	37	4.56	1.39	5.95
7	Village Streets	26	15	41	3.59	2.50	6.09
8	Economic Infrastructure	15	5	20	3.30	2.50	5.80
9	Electrification	12	16	28	1.90	1.71	3.61
10	Streetlights	49	24	73	1.54	1.50	3.04
11	Solid Waste Management	14	9	23	1.86	1.09	2.95
12	Digital Literacy	18	0	18	2.69	0.20	2.89
13	Health	8	9	17	0.69	0.88	1.57
14	Public Infrastructure	2	13	15	1.14	0.46	1.60
15	Enterprise Development	3	7	10	0.35	1.10	1.45
16	Sports Infrastructure	3	4	7	0.23	0.89	1.12
17	Skill Development	8	0	8	0.96	0.00	0.96
18	Animal Husbandry	5	5	10	0.00	0.44	0.44
19	Citizen Service Centre	5	3	8	0.15	0.20	0.35
20	Public Transport	0	1	1	0.00	0.25	0.25
	Total	**374**	**251**	**625**	**72.82**	29.91	**102.73**

Model Estimate for Piggery Shelter

Sl. No.	Description	Nos.	Length in feet	Width in feet	Ht/thick in feet	Vol/ Area in cft/sft	Vol/ Area in cum	Unit Rate in Rs.	Amount i Rs.
1	Earth work in excavation in hard soil in foundation								
	Long wall	2	20.17	2.00	2.50	201.70			
	Short wall	3	7.17	2.00	2.50	107.55			
						309.25 Cft	**8.75 Cum**	91.72	802.00
2	Filling F & P with Sand well watered & rammed								
	Long wall	2	20.17	2.00	1.00	80.68			
	Short wall	3	7.17	2.00	1.00	43.02			
						123.70 Cft	**3.50 Cum**	410.22	1436.00
3	Cement concrete (1:4:8) using 40 mm size hbhg metal including curing etc.								
	Long wall	2	20.17	2.00	0.33	26.62			
	Short wall	3	7.17	2.00	0.33	14.20			
						40.82 Cft	**1.16 Cum**	3176.10	3669.00
4	Fly ash brick 0'-10"in C:M(1:6) for foundation and plinth etc. complete.								
	1st footing								
	Long wall	2	19.42	1.25	0.58	28.16			
	Short wall	3	7.92	1.25	0.58	17.23			
	Plinth								
	Long wall	2	19.00	0.83	1.42	44.79			
	Short wall	3	8.34	0.83	1.42	29.49			
						119.66 Cft	**3.39 Cum**	3411.40	11552.00
5	Fly ash brick 0'-10"in C:M (1:6) in superstructure etc. complete.								
	Long wall	2	19.00	0.83	5.50	173.47			
	Feeder	2	5.00	0.42	5.25	22.05			
		2	5.00	0.42	0.50	2.10			
	Short wall	2	8.34	0.83	5.50	76.14			
	Feeder	4	1.33	0.42	0.50	1.12			
	Deduction for opening	-2	3.00	0.83	4.00	-19.92			
						254.96 Cft	**7.22 Cum**	3444.39	24853.00
6	4" dry brick khoa well watered and rammed for flooring etc. complete.								
	Room	1	16.50	8.34		**137.61 Sft**	**12.78 Sqm**	175.60	2244.00
7	25mm thick D.P.C. with C:C (1:2:4) using 12mm size C.B.H.G chips including hoisting and laying etc complete.								
	Long wall	2	19.00	0.83		31.54			
	Short wall	3	8.34	0.83		20.77			
						52.31	**4.86**	186.10	904.00

					Sft	Sqm		
8	2.5 cm thick A.S. flooring in C.C (1:2:4) with 12 mm size HG chips including punning incl. cost, conveyance & royality of materials.							
	Room	1	16.50	8.34		137.61		
						137.61	**12.78**	200.90	2568.00
						Sft	**Sqm**		
9	Fixing G.C.I. Sheet in roof drilling hole in wind ties including fixing of ridges valleys wind ties etc. excluding cost of fitting							
	G.C.I. Sheet Roofing	2	4.50	7.00		63.00		
						63.00	**5.85**	345.40	2021.00
						Sft	**Sqm**		
10	Supplying,fitting & fixing of Iron angle including cost of material & labour,etc.							
	Iron Door	2	3.00	4.00	24.00	2.50	**60.00**		
	40mmx40mmx6mm size angle in main rafter	4	4.50	18.00	5.49	3.50	**19.20**		
							79.20	75.00	5940.00
							Kg		
11	16mm thick cement plaster with C.M.(1:6) in walls							
	Inside plaster							
	Long wall	2	16.50		5.00	165.00		
	Feeder	2	10.00		4.75	95.00		
	Short wall	4	8.34		5.00	166.80		
						426.80	**39.65**	120.00	4757.00
						Sft	**Sqm**		
12	12mm thick cement plaster with C.M.(1:6) in walls							
	Outside plaster							
	Long wall	2	18.16		6.42	233.17		
	Short wall	2	10.00		6.42	128.40		
	Deduction for opening	2	3.00		4.00	24.00		
						385.57	**35.82**	87.50	3134.00
						Sft	**Sqm**		
13	12 mm thick cement plaster in (1:4) C.M. including cement punning to dados,etc.							
	Long wall	2	18.16		0.50	18.16		
	Feeder	2	10.00		0.50	10.00		
	Short wall	4	10.00		0.50	20.00		
	Feeder	2	10.00		0.50	10.00		
		4	2.66		0.50	5.32		
						63.48	**5.90**	107.80	635.00
						Sft	**Sqm**		
14	Cement washing two coats with cost of all labour & materials .							
	Qnty. As per item No.11						39.65		
	Qnty. As per item No.12						35.82		
							75.47	11.30	852.00
							Sqm		
15	Painting two coats with any approved cement paint to the inside surface including cost of paint & curing.							

	Qnty. As per itemno 14	82 **75.47 Sqm**	22.90	1728.00
	Sub Total		**Rs**	**67095.00**
16	Provision for other unforseen item if any as per actual such as L.Hook,Nut bolt,Washer,100mm P.V.C.Pipe,cost of Display board,etc.			1905.00
	Total		**Rs**	**69000.00**

(Rupees sixty nine thousand)only.

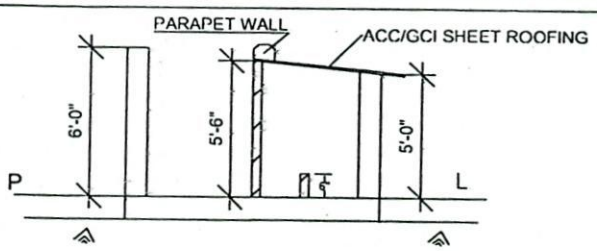

SECTIONAL ELEVATION AT X-X

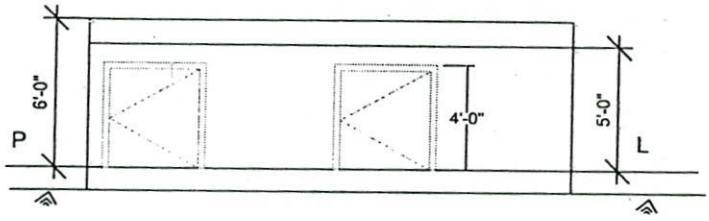

ELEVATION

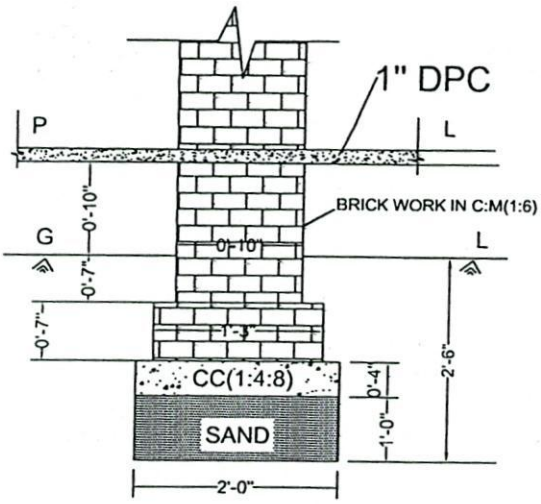

SECTION OF FOUNDATION

NOTE:-

1. Written dimensions in the drawing must be followed.
2. All measurements must be checked before execution.
3. Proper design should be made for foundation before the execution of work as per soil condition.
4. D= 3'-0" x 4'-0" MS Door

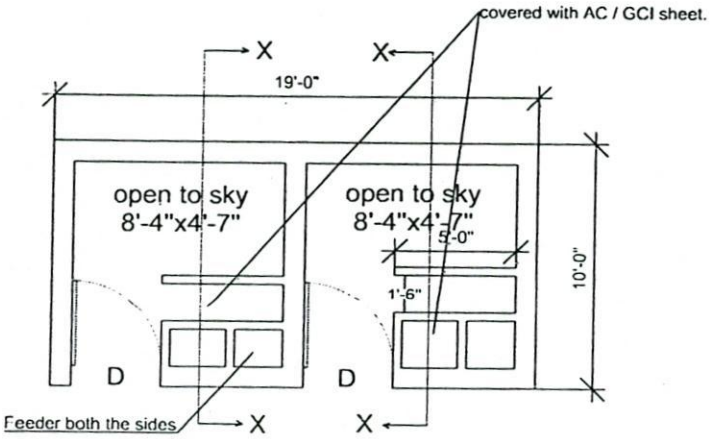

FLOOR PLAN

TITLE - **MODEL PLAN OF PIGGERY SHELTER PLINTH AREA - 190 Sft.**		
GOVT. OF ODISHA, PANCHAYATIRAJ & DW DEPARTMENT		
31.08.17 JUNIOR ENGINEER (P R & DW DEPTT.)	31/08/17 ASSISTANT ENGINEER (P R & DW DEPTT.)	31/8/17 SUPERINTENDING ENGINEER (P R & DW DEPTT.)
DATE:- 30. 08 . 2017	SCALE :- N.T.S	DRG.NO PR & DW/05/ 2017

Model Estimate for Poultry Shed

Sl. No.	Description	Nos.	Length in feet	Width in feet	Ht/thick in feet	Vol/ Area in cft/sft	Vol/ Area in cum	Unit Rate in Rs.	Amount Rs.
1	Earth work in excavation in hard soil in foundation								
	Long wall	2	15.17	2.00	2.50	151.70			
	Short wall	2	5.33	2.00	2.50	53.30			
						205.00 Cft	**5.80 Cum**	91.72	532.00
2	Filling F & P with Sand well watered & rammed								
	Long wall	2	15.17	2.00	1.00	60.68			
	Short wall	2	5.33	2.00	1.00	21.32			
						82.00 Cft	**2.32 Cum**	410.22	951.00
3	Cement concrete (1:4:8) using 40 mm size hbhg metal including curing etc.								
	Long wall	2	15.17	2.00	0.33	20.02			
	Short wall	2	5.33	2.00	0.33	7.04			
						27.06 Cft	**0.77 Cum**	3176.10	2432.00
4	Fly ash brick 0'-10"in C:M(1:6) for foundation and plinth etc. complete.								
	1st footing								
	Long wall	2	14.42	1.25	0.58	20.91			
	Short wall	2	6.08	1.25	0.58	8.82			
	Plinth								
	Long wall	2	14.00	0.83	1.42	33.00			
	Short wall	2	6.50	0.83	1.42	15.32			
						78.05 Cft	**2.21 Cum**	3411.40	7534.00
5	Fly ash brick 0'-10"in C:M (1:6) in superstructure etc. complete.								
	Long wall	2	14.00	0.83	1.50	34.86			
	Parapet	1	14.00	0.83	0.58	6.74			
	Brick Pillar	6	1.25	0.83	6.00	37.35			
	Short wall	2	6.50	0.83	1.50	16.19			
	Parapet	2	6.50	0.83	0.58	6.26			
	Deduction for opening	-1	3.00	0.83	1.50	-3.74			
						97.66 Cft	**2.76 Cum**	3444.39	9520.00
6	4" dry brick khoa well watered and rammed for flooring etc. complete.								
	Room	1	12.34	6.50		**80.21 Sft**	**7.45 Sqm**	175.60	1308.00
7	25mm thick D.P.C. with C:C (1:2:4) using 12mm size C.B.H.G chips including hoisting and laying etc complete.								
	Long wall	2	14.00	0.83		23.24			
	Short wall	2	6.50	0.83		10.79			
						34.03	**3.16**	186.10	588.00

					Sft	Sqm		
8	2.5 cm thick A.S. flooring in C.C (1:2:4) with 12 mm size HG chips including punning incl. cost, conveyance & royality of materials.							
	Room	1	12.34	6.50		80.21		
						80.21 Sft	**7.45** Sqm	200.90	1497.00
9	Fixing G.C.I. Sheet in roof drilling hole in wind ties including fixing of ridges valleys wind ties etc. excluding cost of fitting							
	G.C.I. Sheet Roofing	1	14.00	10.00		140.00		
						140.00 Sft	**13.01** Sqm	345.40	4492.00
10	Supplying,fitting & fixing of Iron angle including cost of material & labour,etc.							
	50mmx50mmx6mm size angle in main trusses	1	8.16	8.16	2.49	4.50	**11.19**	
	40mmx40mmx6mm size angle in main rafter	2	14.00	28.00	8.53	3.50	**29.87**	
							41.06 Kg	75.00	3079.00
11	16mm thick cement plaster with C.M.(1:6) in walls							
	Inside plaster							
	Long wall	2	12.33		1.50	36.99		
	Short wall	2	6.50		1.50	19.50		
	Brick Pillar	6	4.16		6.00	149.76		
						206.25 Sft	**19.16** Sqm	120.00	2299.00
12	12mm thick cement plaster with C.M.(1:6) in walls							
	Outside plaster							
	Long wall	2	13.99		2.42	67.71		
	Short wall	2	8.16		2.42	39.49		
	Parapet	1	30.31		2.00	60.62		
	Deduction for opening	1	3.00		1.50	4.50		
						172.33 Sft	**16.01** Sqm	87.50	1400.00
13	12 mm thick cement plaster in (1:4) C.M. including cement punning to dados,etc.							
	Long wall	2	13.99		0.50	13.99		
	Short wall	2	8.16		0.50	8.16		
						22.15 Sft	**2.06** Sqm	107.80	221.00
14	Cement washing two coats with cost of all labour & materials .							
	Qnty. As per item No.11						19.16	
	Qnty. As per item No.12						16.01	
							35.17 Sqm	11.30	397.00
15	Painting two coats with any approved cement paint to the inside surface including cost of paint & curing.							
	Qnty. As per itemno 14						**35.17** Sqm	22.90	805.00

	Sub Total	**Rs 37055.0**
16	Provision for other unforseen item if any as per actual such as L.Hook,Nut bolt,Washer,100mm P.V.C.Pipe,cost of Display board,etc.	1945.0(
	Total	**Rs 39000.0**

(Rupees thirty nine thousand)only.

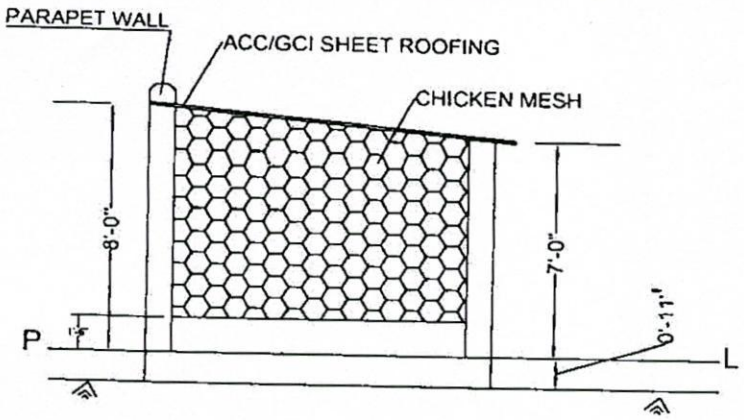

SECTION AT X-X

ELEVATION

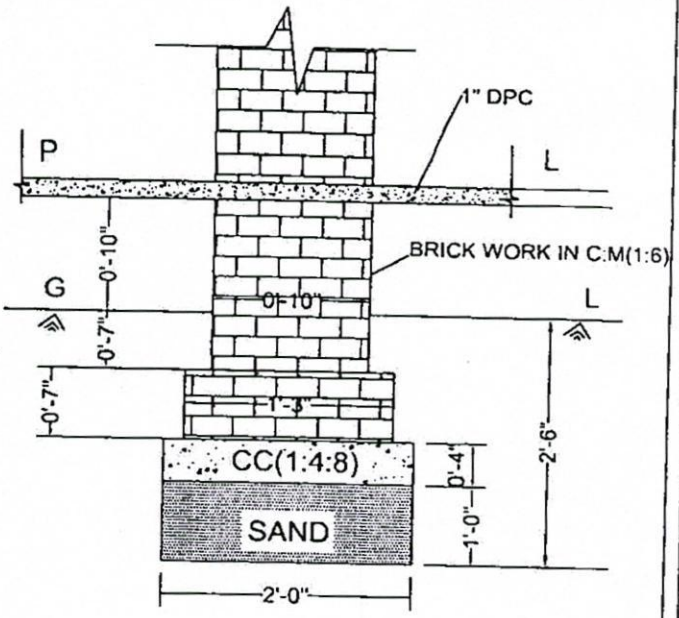

SECTION OF FOUNDATION

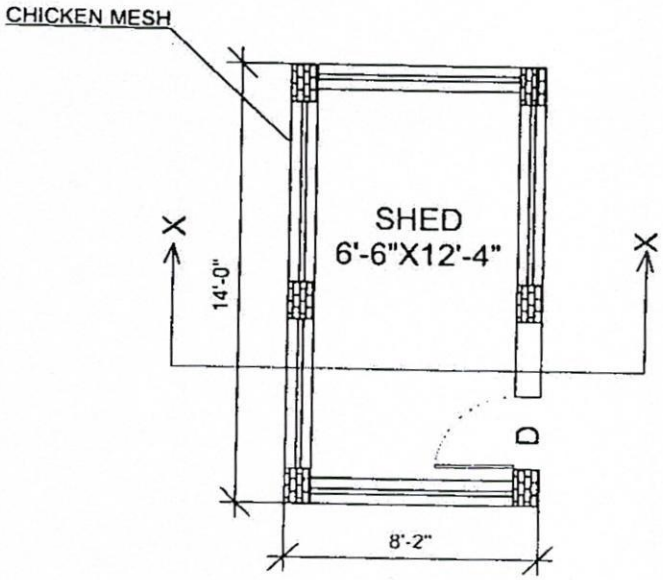

FLOOR PLAN

NOTE:-

1. Written dimensions in the drawing must be followed.
2. All measurements must be checked before execution.
3. Proper design should be made for foundation before the execution of work as per soil condition.
4. Door closing should be used with local available materials.

TITLE - MODEL PLAN OF POULTRY SHED PLINTH AREA - 114 Sft.		
GOVT. OF ODISHA, PANCHAYATIRAJ & DW DEPARTMENT		
31.08.17 JUNIOR ENGINEER (P R & DW DEPTT.)	31/08/17 ASSISTANT ENGINEER (P R & DW DEPTT.)	31/8/17 SUPERINTENDING ENGINEER (P R & DW DEPTT.)
DATE:- 30. 08. 2017	SCALE - N.I.S	DRG.NO PR & DW/03/ 2017